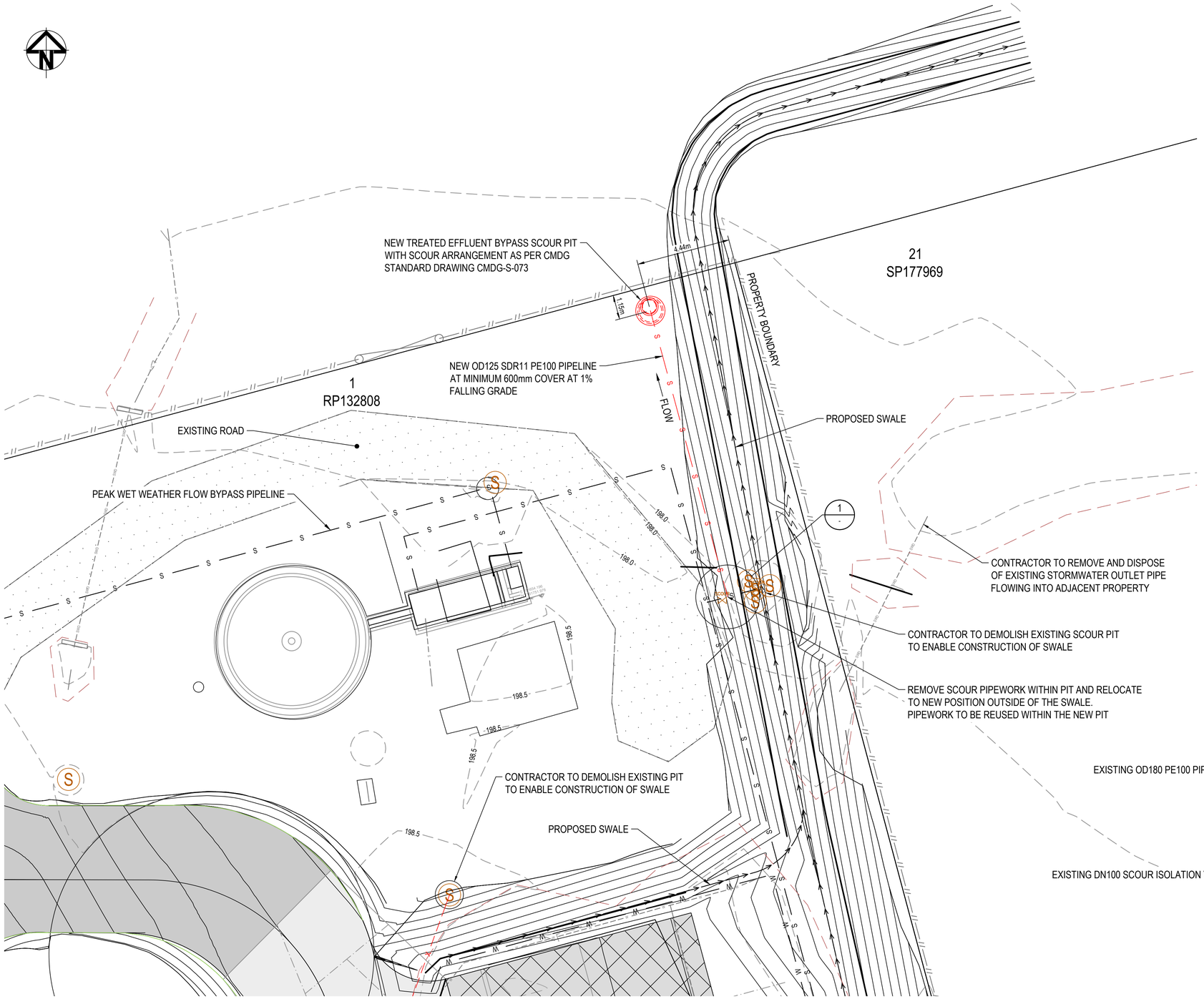

LAYOUT PLAN
SCALE 1:100

LEGEND

	ROAD CONTROL LINES
	NEW PACKAGE PLANT SLAB
	NEW GRAVEL ACCESS ROAD
	EXISTING ROAD
	EXISTING FENCE
380.000	EXISTING CONTOURS
380.000	DESIGN CONTOURS
S	EXISTING SEWER
T	EXISTING TELSTRA
W	EXISTING WATER
SWD	EXISTING STORM WATER
	NEW SWALE DRAIN
S	NEW SEWER
X	TO BE DECOMMISSIONED

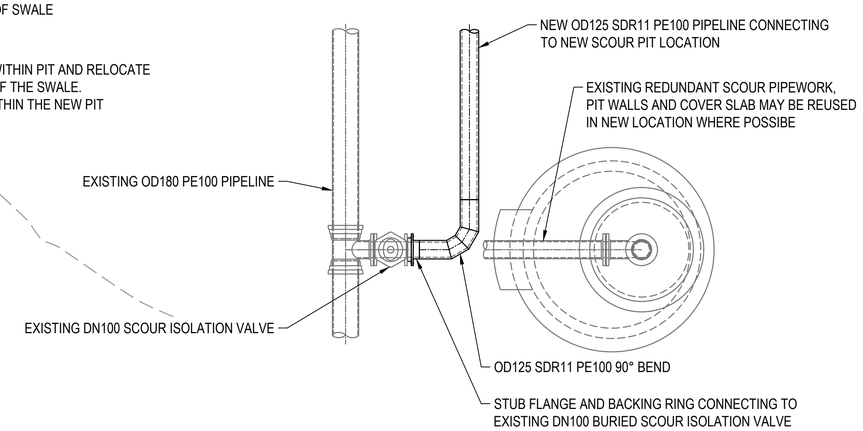

DETAIL 1/-
1:20

GANDEN
ENGINEERS AND PROJECT MANAGERS
WWW.GANDEN.COM.AU

SCALES — 100mm ON ORIGINAL DRAWING
0 1 2 4 6 8 10m
1 : 100
0 0.5 1 1.5 2m
1 : 20
ORIG.SIZE A1

REV	DESCRIPTION	DATE	DWN	APP
1	ISSUED FOR CONSTRUCTION	01.06.23	AC	TN
0	ISSUED FOR TENDER	10.03.23	AC	TN

REVISIONS

AS CONSTRUCTED	REV.
NAME:	
DATE:	
SIGNATURE:	
RPEQ No.	
FOR CONSTRUCTION	REV. 1
NAME:	T.NEL
DATE:	01.06.23
SIGNATURE:	
RPEQ No.	9061

Banana SHIRE
SHIRE OF OPPORTUNITY

DRAWING STATUS: CONSTRUCTION

TITLE
TAROOM SEWAGE TREATMENT PLANT UPGRADE

SCOUR VALVE PIT RELOCATION
PLAN AND DETAIL

DRAWING NUMBER: TARSTP-DWG-CIV-0014
REVISION: 1

N:\02 - Projects\184\136 - Drawings\01 - CAD\TARSTP-DWG-CIV-0014.dwg, Plotted By Aaron Gray, Thursday, 1 June 2023 15:09 PM